Plan 3
MC12A, SP12C, 12TRXC
5.85 CUBIC FEET ENCLOSURE

Basic Construction Notes:

1. Enclosure inside dimensions compensate for the internal volume taken up by speaker components, internal bracing, and the vent. Slight variations due to the specific mid- and high-frequency components used do not affect performance.
2. All corners and joints to be securely glued and nailed or screwed.
3. Three mutually adjacent inside surfaces (top, one side, and rear) to be lined with a 1- or 2-inch thickness of glass wool or similar acoustic absorptive material. Do not block vent opening.
4. Enclosure material to be 3/4" plywood or particle board.
5. Internal bracing to be 3/4" x 3/4" or 1" x 1" material.
6. **(VERSION B ONLY)** the front or rear enclosure panel must be removable for installation of the woofer (MC12A), which must mount to the rear of the front panel. Removable panels should be secured with wood screws and weather stripping tape.
7. For more detailed commentary on construction, see "Electro-Voice Guide to Speaker Enclosure Contruction" (Form 1788).

Speaker Installation Notes (Version A):

1. Plans show permanently installed front and rear enclosure panels. Mid- and high-frequency components are mounted and wired through the woofer opening. The woofer is installed, last, on the front side of the front panel.
2. Machine screws (bolts) and nuts should be used for installation of speaker components. T-nuts are convenient, since they are easily affixed to the front panel before component installation.
3. The 8HD horn (part of BB4A) may be mounted from the front or rear of the front panel. Use # 10-24 or # 10-32 nuts and bolts.
4. The T35 tweeter (part of BB1) must be rear mounted. Use # 8-32 or # 8-40 nuts and bolts.
5. After other system components and wiring are installed, the SP12C or 12TRXC should be mounted from the front side of the front panel. Use the SMH-1 mounting hardware kit (all necessary nuts, bolts, and clamps are supplied).

Speaker Installation Notes (Version B):

1. Machine screws (bolts) and nuts are recommended for installation of speaker components, although wood screws may be used. When machine screws are used, T-nuts are convenient, since they are easily affixed to the front panel before component installation.
2. The MR10 (part of MF1) may be mounted from the front or rear of the front panel. Use # 10-24 or # 10-32 nuts and bolts.
3. The TW35 (part of HF1) must be rear mounted. Use # 8-32 or # 8-40 nuts and bolts.
4. The MC12A must be rear mounted. Use # 10-24 or # 10-32 nuts and bolts.

Performance Specifications with SP12C/12TRXC (Version A):

1. Low-Frequency 3-dB-Down Point: 43 Hz
2. $SPL_{MF(max)}$: 111 dB
3. $SPL_{LF(max)}$: 110 dB

Performance Specifications with MC12A (Version B):

1. Low-Frequency 3-dB-Down Point: 43 Hz
2. $SPL_{MF(max)}$: 108 dB
3. $SPL_{LF(max)}$: 102 dB
4. For definitions and other specifications see Engineering Data sheet and E-V brochure "How to build an Electro-Voice Component Speaker System. From the ground up."

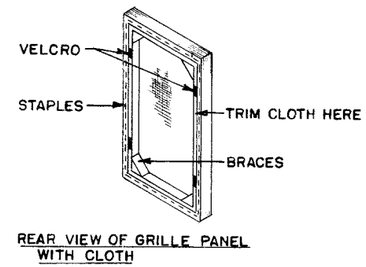

REAR VIEW OF GRILLE PANEL WITH CLOTH

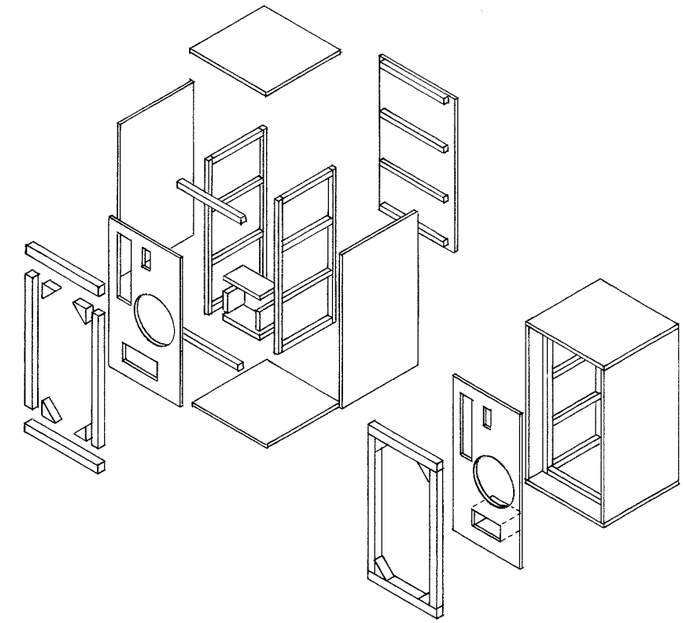

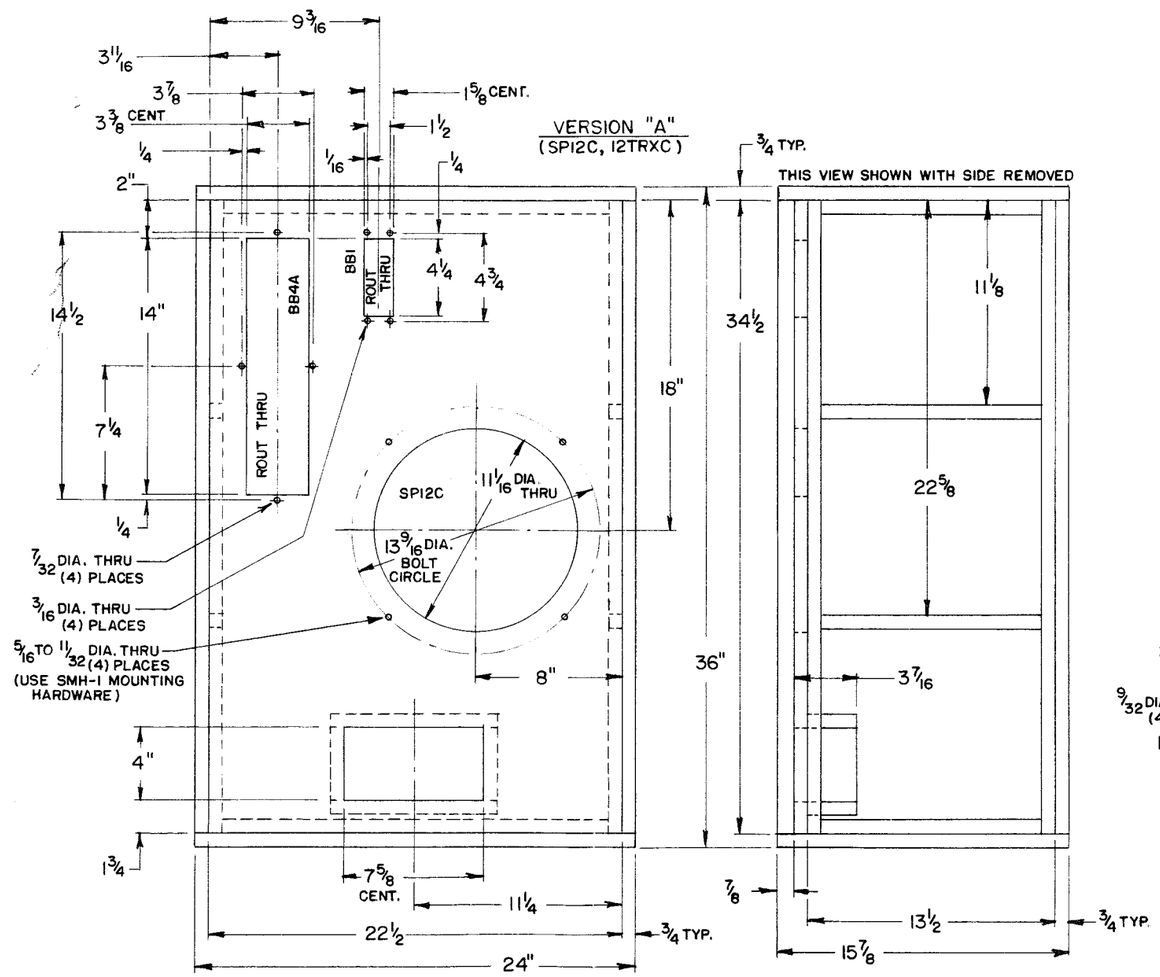

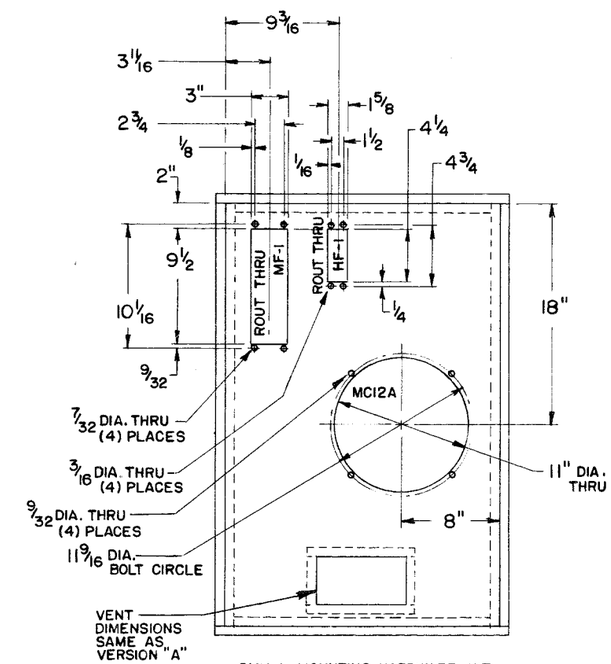

SMH-1 MOUNTING HARDWARE KIT NOT TO BE USED WITH VERSION "B", AS THE "MC12A" MUST BE REAR MOUNTED.

VERSION "B"
(MC12A)

Electro-Voice®
a MARK IV company
600 CECIL STREET, BUCHANAN, MICHIGAN 49107

Form No. 1791–824 Litho in U.S.A.

Fred Vobbe
Signature Not Verified
Digitally signed by Fred Vobbe
DN: cn=Fred Vobbe, c=nl, o=Ikon, ou=Ikon, c=US
Date: 2010.05.07 21:48:41 -04'00'